physicsUK
Smarter practice. Stronger understanding

WORKSHEETS
ATTEMPT | CHECK | CORRECT | IMPROVE

Young modulus practical and data analysis worksheet

AQA AS 7407 and first-year A Level 7408 | OCR A AS H156 and A Level H556

35–40 minutes independent practice + 15–20 minutes review | 36 marks

Specification points covered

- AQA 7407 / 7408: 3.4.2.2 selected stress, strain, Young modulus and metal-wire investigation (Required practical 4); 3.1.2 selected uncertainty, error bars and limiting gradients.
- OCR A H156 / H556: 3.4.2(c), (d)(i)–(ii), selected stress, strain and Young modulus procedure; 1.1.3(d)(i)–(ii), 1.1.4(d)–(e), selected analysis, uncertainty and improvement.

Helix checks the stiffness of a bolt-material batch before using it in a composite-curing production line. Use the test measurements to decide what the Young modulus result supports, and what it cannot prove. The machinery test is carried out by trained staff; the method questions are planning exercises.

1. Why a tensile test can check a bolt batch [5 marks]

Helix manufactures bolts for composite-curing machinery. A uniform trial bolt has original gauge length 0.180 m and diameter 12.0 mm. A tensile force of 18.0 kN produces an extension of 0.140 mm, within its linear elastic region.

(a) Calculate the tensile stress and tensile strain in the trial bolt. [2 marks]

(b) Determine the Young modulus of the material. [1 mark]

(c) Starting with stress and strain, show that the gradient k of a force–extension graph gives E = kL/A for a uniform sample. [2 marks]

Continue your physics journey
Videos, practice and support for your next step
www.physicsuk.co.uk

2. Measuring the batch sample [4 marks]

The test machine below stretches a uniform sample from a new bolt batch. Its original gauge length between the reference marks is (0.250 ± 0.001) m. A micrometer has a +0.010 mm zero error. Five displayed diameters are 6.020, 6.000, 6.010, 6.030 and 5.990 mm.

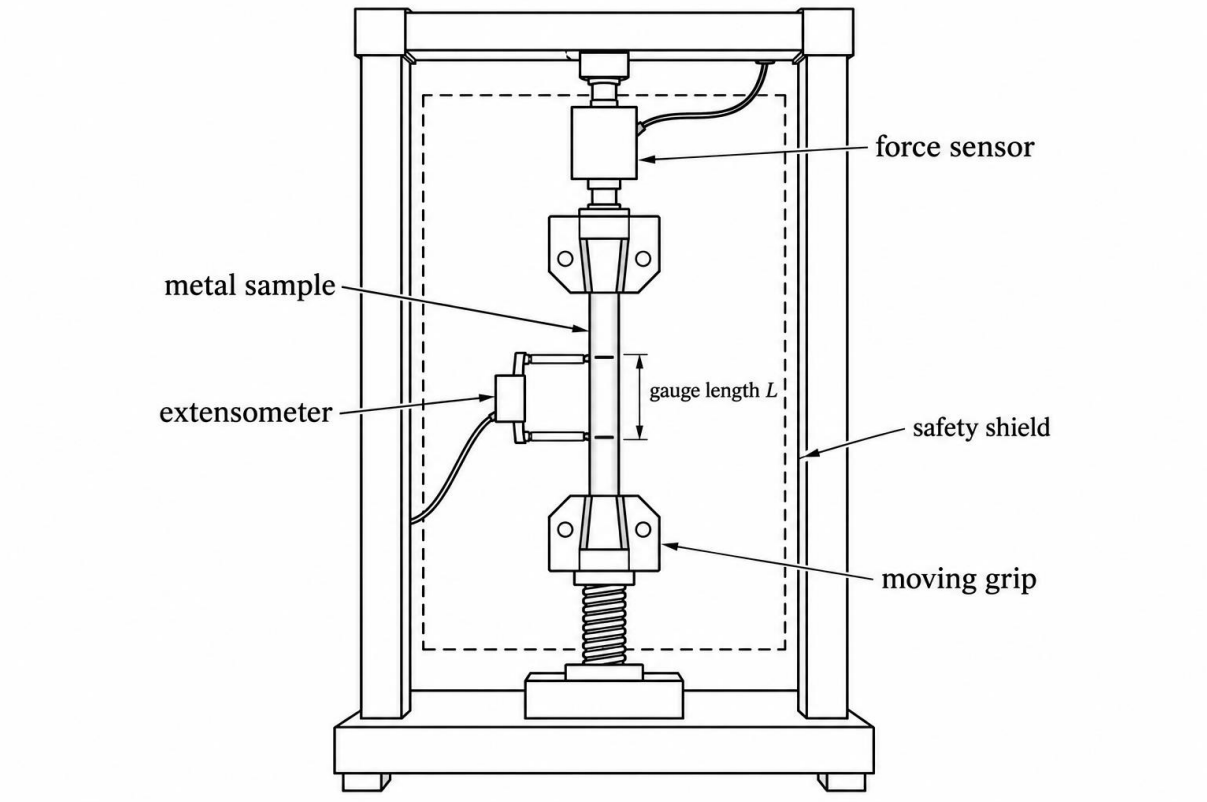

(a) Correct the readings and calculate the mean diameter. [1 mark]

(b) Calculate the cross-sectional area of the sample. [1 mark]

(c) Explain why the extension should be measured between the gauge marks rather than from the movement of the machine grip. [2 marks]

Continue your physics journey
Videos, practice and support for your next step
www.physicsuk.co.uk

3. Plotting the tensile-test evidence [6 marks]

The sample dimensions are those in Question 2. The measured force and extension are given in the table. Each non-zero extension has absolute uncertainty ±0.025 mm; force uncertainty is negligible here. Do not add an uncertainty bar to the zero datum.

Force F / kN	Extension ΔL / mm
0	0
4.0	0.177
8.0	0.354
12.0	0.531
16.0	0.708
20.0	0.884

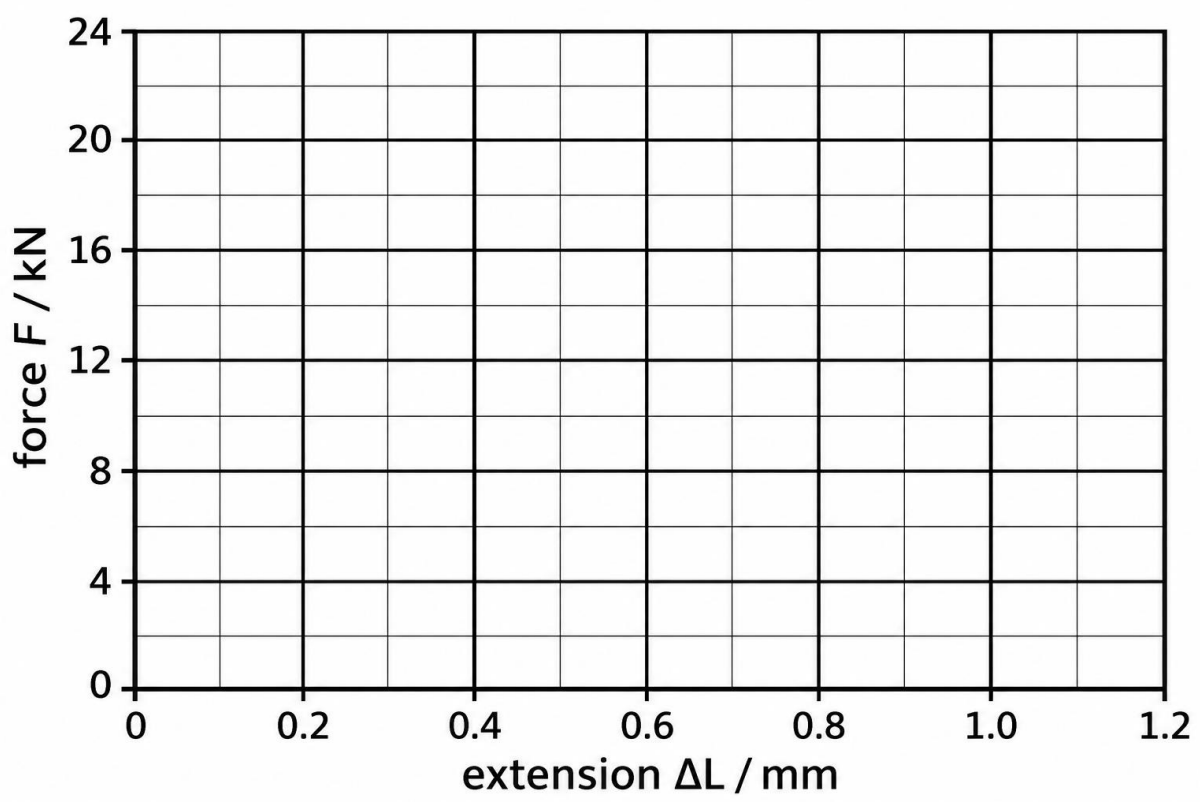

(a) Plot the five non-zero data points on the axes and add their horizontal uncertainty bars. [2 marks]

(b) Draw a straight line of best fit over the measured range. [1 mark]

(c) Use a large triangle on your best-fit line to determine its gradient in N m^{-1}. [2 marks]

(d) Explain why the force and extension data should be restricted to the proportional region when this gradient is used to obtain E. [1 mark]

Continue your physics journey
Videos, practice and support for your next step
www.physicsuk.co.uk

4. Young modulus and limiting gradients [5 marks]

Use L = 0.250 m and A = 2.827 × 10^{-5} m^2. Two candidate limiting lines meet the horizontal error bars. The steep line passes through (0.202 mm,4.0 kN) and (0.859 mm,20.0 kN); the shallow line through (0.152 mm,4.0 kN) and (0.909 mm,20.0 kN).

(a) Use your best-fit gradient to determine E for this batch sample. [2 marks]

(b) Calculate the steep and shallow limiting gradients in N m^{-1}. [2 marks]

(c) Explain why limiting lines need not pass through the origin even if the best-fit line is close to it. [1 mark]

5. Can the batch meet its stiffness specification? [5 marks]

For this question use k_{best} = 2.26 × 10^7 N m^{-1}, k_{max} = 2.44 × 10^7 N m^{-1} and k_{min} = 2.11 × 10^7 N m^{-1}. The corrected mean diameter is (6.000 ± 0.010) mm. Use the half-range of limiting gradients as the absolute uncertainty in k.

(a) Determine the percentage uncertainty in k and in the cross-sectional area A. [2 marks]

(b) Estimate the percentage uncertainty in E = kL/A and give E with an absolute uncertainty, using E = 200 GPa. [2 marks]

(c) The supplier quotes 205 GPa. Decide whether this is consistent with the result and explain what your conclusion does not establish. [1 mark]

Continue your physics journey
Videos, practice and support for your next step
www.physicsuk.co.uk

6. A scaffolded six-mark practical plan [6 marks]

A school team checks the same material using a long thin wire suspended from a rigid clamp, small known masses, a pointer beside a fixed millimetre scale, and a micrometer. Plan this classroom wire experiment using the three prompts. The whole plan is worth six marks.

(a) Describe the dimensional measurements and the initial reference setting. [2 marks]

(b) Describe how forces and extensions are collected reliably and safely. [2 marks]

(c) Describe the graph, calculation and treatment of uncertainty. [2 marks]

Continue your physics journey

Videos, practice and support for your next step

www.physicsuk.co.uk

7. Improving the test and applying its result [5 marks]

The factory considers a longer, thinner sample of the same metal, tested over the same safe stress range.

(a) Explain one uncertainty benefit of a longer sample and one uncertainty disadvantage of a thinner sample. [2 marks]

(b) A technician says a large extension proves the material has a low E. Explain why the sample dimensions and load must also be considered. [1 mark]

(c) Use E = 200 GPa for an elastic production bolt with L = 95.0 mm, diameter 18.0 mm and tensile force 45.0 kN. Calculate its extension and decide whether it meets a 0.100 mm limit. [2 marks]

Review: define the measured gauge length, obtain a gradient with SI units, calculate E rather than stiffness alone, and use an uncertainty interval to qualify the batch decision.

Continue your physics journey
Videos, practice and support for your next step
www.physicsuk.co.uk