physics UK
Smarter practice. Stronger understanding

SOLUTIONS
ATTEMPT | CHECK | CORRECT | IMPROVE

Young modulus practical and data analysis solutions

AQA AS 7407 and first-year A Level 7408 | OCR A AS H156 and A Level H556

Matching solutions and teaching prompts for the class review | 36 marks

Specification points covered

- AQA 7407 / 7408: 3.4.2.2 selected stress, strain, Young modulus and metal-wire investigation (Required practical 4); 3.1.2 selected uncertainty, error bars and limiting gradients.
- OCR A H156 / H556: 3.4.2(c), (d)(i)–(ii), selected stress, strain and Young modulus procedure; 1.1.3(d)(i)–(ii), 1.1.4(d)–(e), selected analysis, uncertainty and improvement.

Helix checks the stiffness of a bolt-material batch before using it in a composite-curing production line. Use the test measurements to decide what the Young modulus result supports, and what it cannot prove. The machinery test is carried out by trained staff; the method questions are planning exercises.

1. Why a tensile test can check a bolt batch [5 marks]

Helix manufactures bolts for composite-curing machinery. A uniform trial bolt has original gauge length 0.180 m and diameter 12.0 mm. A tensile force of 18.0 kN produces an extension of 0.140 mm, within its linear elastic region.

(a) Calculate the tensile stress and tensile strain in the trial bolt. [2 marks]

(b) Determine the Young modulus of the material. [1 mark]

(c) Starting with stress and strain, show that the gradient k of a force–extension graph gives E = kL/A for a uniform sample. [2 marks]

Answer / mark points: (a) $A = \pi(0.0120)^2/4 = 1.131 \times 10^{-4}$ m^2, so $\sigma = 18000/A = 1.59 \times 10^8$ Pa. [1] $\varepsilon = (0.140 \times 10^{-3})/0.180 = 7.78 \times 10^{-4}$, with no unit. [1] (b) $E = \sigma/\varepsilon = 2.05 \times 10^{11}$ Pa (205 GPa). [1] (c) $E = (F/A)/(\Delta L/L) = (L/A)(F/\Delta L)$. [1] In the proportional region $k = \Delta F/\Delta(\Delta L)$, so $E = kL/A$. [1]

Teacher prompt / common error: Use the sample cross-sectional area, not a machine or plate area. The gradient is stiffness in N m^{-1}, not Young modulus in Pa.

Continue your physics journey
Videos, practice and support for your next step
www.physicsuk.co.uk

2. Measuring the batch sample [4 marks]

The test machine below stretches a uniform sample from a new bolt batch. Its original gauge length between the reference marks is (0.250 ± 0.001) m. A micrometer has a +0.010 mm zero error. Five displayed diameters are 6.020, 6.000, 6.010, 6.030 and 5.990 mm.

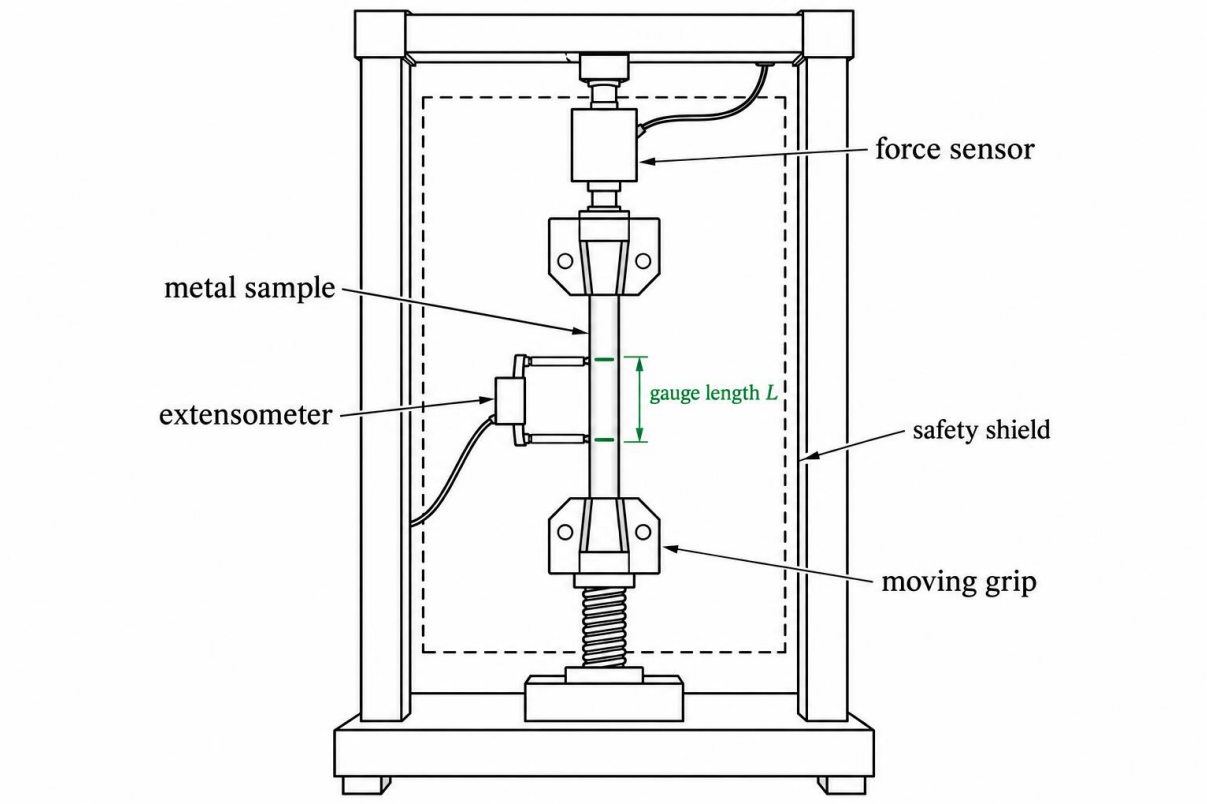

(a) Correct the readings and calculate the mean diameter. [1 mark]

(b) Calculate the cross-sectional area of the sample. [1 mark]

(c) Explain why the extension should be measured between the gauge marks rather than from the movement of the machine grip. [2 marks]

Answer / mark points: (a) Displayed mean = 6.010 mm. Subtract the +0.010 mm zero error: corrected mean d = 6.000 mm. [1] (b) $A = \pi(6.000 \times 10^{-3})^2/4 = 2.827 \times 10^{-5}$ m^2. [1] (c) The grip movement can include compliance/deformation of the frame or grips and any slipping/seating. [1] Measuring the change between marks isolates the extension of the known sample gauge length used in the strain calculation. [1]

Teacher prompt / common error: Zero correction addresses a systematic offset; averaging alone does not remove it. Measurements should sample different positions and orientations.

Continue your physics journey
Videos, practice and support for your next step
www.physicsuk.co.uk

3. Plotting the tensile-test evidence [6 marks]

The sample dimensions are those in Question 2. The measured force and extension are given in the table. Each non-zero extension has absolute uncertainty ±0.025 mm; force uncertainty is negligible here. Do not add an uncertainty bar to the zero datum.

Force F / kN	Extension ΔL / mm
0	0
4.0	0.177
8.0	0.354
12.0	0.531
16.0	0.708
20.0	0.884

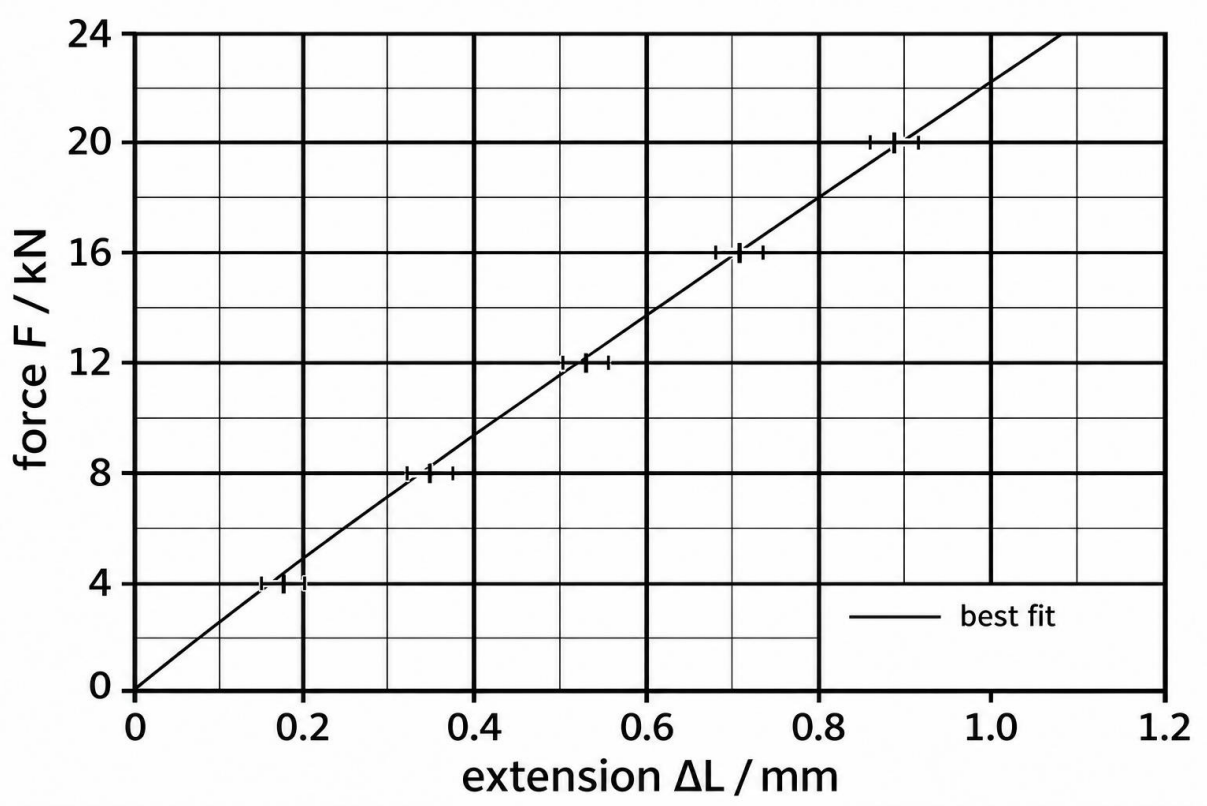

(a) Plot the five non-zero data points on the axes and add their horizontal uncertainty bars. [2 marks]

(b) Draw a straight line of best fit over the measured range. [1 mark]

(c) Use a large triangle on your best-fit line to determine its gradient in N m^{-1}. [2 marks]

(d) Explain why the force and extension data should be restricted to the proportional region when this gradient is used to obtain E. [1 mark]

Answer / mark points: (a) Plot (0.177 mm,4.0 kN), (0.354,8.0), (0.531,12.0), (0.708,16.0), (0.884,20.0). [1] Each horizontal bar extends ±0.025 mm, with no vertical bar. [1] Assess reasonable graph-reading tolerance. (b) A single balanced straight line through the plotted trend, close to the origin; do not join successive points. [1] The supplied solution plot is an illustrative accepted best fit. (c) For example, using about (0,0) and (0.884 mm,20.0 kN), $k = (20.0 \times 10^{3})/(0.884 \times 10^{-3})$. [1] $k \approx 2.26 \times 10^{7}$ N m^{-1}. [1] Allow 2.20–2.32 × 10^{7} for a valid large triangle on a sensible fit. (d) The method assumes a constant stress/strain ratio, so F must be proportional to ΔL; a changing gradient outside that region would not give one linear Young modulus. [1]

Teacher prompt / common error: Read coordinates from the best-fit line, not just from two neighbouring data points. Convert both kN and mm.

Continue your physics journey
Videos, practice and support for your next step
www.physicsuk.co.uk

4. Young modulus and limiting gradients [5 marks]

Use $L = 0.250$ m and $A = 2.827 \times 10^{-5}$ m^2. Two candidate limiting lines meet the horizontal error bars. The steep line passes through (0.202 mm,4.0 kN) and (0.859 mm,20.0 kN); the shallow line through (0.152 mm,4.0 kN) and (0.909 mm,20.0 kN).

(a) Use your best-fit gradient to determine E for this batch sample. [2 marks]

(b) Calculate the steep and shallow limiting gradients in N m^{-1}. [2 marks]

(c) Explain why limiting lines need not pass through the origin even if the best-fit line is close to it. [1 mark]

Answer / mark points: (a) $E = kL/A = (2.26 \times 10^7 \times 0.250)/(2.827 \times 10^{-5})$. [1] $E \approx 2.00 \times 10^{11}$ Pa (200 GPa). [1] Apply error carried forward from a valid graph gradient. (b) $k_{max} = 16000/[(0.859 - 0.202) \times 10^{-3}] = 2.44 \times 10^7$ N m^{-1}. [1] $k_{min} = 16000/[(0.909 - 0.152) \times 10^{-3}] = 2.11 \times 10^7$ N m^{-1}. [1] (c) They represent the steepest/shallowest slopes consistent with the uncertain data; forcing a zero intercept adds a constraint not justified by the measured non-zero points. [1]

Teacher prompt / common error: Limiting slopes use opposite ends of widely separated uncertainty bars, and must remain consistent with the intermediate bars.

5. Can the batch meet its stiffness specification? [5 marks]

For this question use $k_{best} = 2.26 \times 10^7$ N m^{-1}, $k_{max} = 2.44 \times 10^7$ N m^{-1} and $k_{min} = 2.11 \times 10^7$ N m^{-1}. The corrected mean diameter is (6.000 ± 0.010) mm. Use the half-range of limiting gradients as the absolute uncertainty in k.

(a) Determine the percentage uncertainty in k and in the cross-sectional area A. [2 marks]

(b) Estimate the percentage uncertainty in E = kL/A and give E with an absolute uncertainty, using E = 200 GPa. [2 marks]

(c) The supplier quotes 205 GPa. Decide whether this is consistent with the result and explain what your conclusion does not establish. [1 mark]

Answer / mark points: (a) $\Delta k/k \times 100 = [(2.44 - 2.11)/2]/2.26 \times 100 = 7.30\%$. [1] Percentage uncertainty in A = $2(0.010/6.000) \times 100 = 0.333\%$. [1] (b) Percentage uncertainty in L = $(0.001/0.250) \times 100 = 0.400\%$; add fractional uncertainties: 7.30 + 0.333 + 0.400 = 8.03%. [1] Absolute uncertainty ≈ 16 GPa, so E = (200 ± 16) GPa. [1] (c) 205 GPa lies inside approximately 184–216 GPa, so it is consistent with these measurements; this does not prove absence of systematic error or certify bolt strength. Both qualifications required. [1]

Teacher prompt / common error: A measured value being close to the supplier's value is not enough: compare with the uncertainty interval. Young modulus is not breaking stress.

Continue your physics journey

Videos, practice and support for your next step

www.physicsuk.co.uk

6. A scaffolded six-mark practical plan [6 marks]

A school team checks the same material using a long thin wire suspended from a rigid clamp, small known masses, a pointer beside a fixed millimetre scale, and a micrometer. Plan this classroom wire experiment using the three prompts. The whole plan is worth six marks.

(a) Describe the dimensional measurements and the initial reference setting. [2 marks]

(b) Describe how forces and extensions are collected reliably and safely. [2 marks]

(c) Describe the graph, calculation and treatment of uncertainty. [2 marks]

Answer / mark points: (a) Measure diameter with a zero-checked micrometer at several positions and two orientations; correct zero error, find mean d and $A = \pi d^2/4$. [1] Use a small preload to straighten the wire, measure L from the fixed clamp to the pointer attachment at this reference, and record the initial pointer reading. [1] (b) Add small known masses in steps, using $\Delta F = \Delta mg$, allow readings to settle and record the pointer displacement relative to its initial reading; read perpendicular to a close scale and repeat/unload to check repeatability. [1] Stay in the proportional region, secure the clamp, wear eye protection and place a catch tray just below the masses. [1] (c) Plot force against extension in SI units, use a best-fit straight line and large triangle for k, then $E = kL/A$; an appropriate stress–strain graph with gradient E is equivalent. [1] Estimate measurement uncertainties, use limiting slopes/error bars where appropriate, and combine percentage uncertainties including twice the fractional diameter uncertainty. [1]

Teacher prompt / common error: This is the school wire method, not a requirement for an industrial machine. A preload straightens the wire; the measured length and extension must refer to the same wire section.

Continue your physics journey

Videos, practice and support for your next step

www.physicsuk.co.uk

7. Improving the test and applying its result [5 marks]

The factory considers a longer, thinner sample of the same metal, tested over the same safe stress range.

(a) Explain one uncertainty benefit of a longer sample and one uncertainty disadvantage of a thinner sample. [2 marks]

(b) A technician says a large extension proves the material has a low E. Explain why the sample dimensions and load must also be considered. [1 mark]

(c) Use E = 200 GPa for an elastic production bolt with L = 95.0 mm, diameter 18.0 mm and tensile force 45.0 kN. Calculate its extension and decide whether it meets a 0.100 mm limit. [2 marks]

Answer / mark points: (a) For the same stress, strain is unchanged, so a longer gauge length produces greater extension and reduces the fractional extension-reading uncertainty. [1] The same absolute diameter uncertainty is a larger fraction of a smaller diameter, and its percentage contribution to A is doubled. [1] (b) $\Delta L = FL/(AE)$, so larger F or L, or smaller A, can increase extension without any change in E. [1] (c) $A = \pi(0.0180)^2/4 = 2.545 \times 10^{-4}$ m^2; $\Delta L = 45000 \times 0.0950/(A \times 200 \times 10^9) = 8.40 \times 10^{-5}$ m = 0.0840 mm. [1] This model predicts an extension below 0.100 mm, so it meets the stated extension limit (not a complete strength/safety certification). [1]

Teacher prompt / common error: Geometry changes stiffness, not the material's Young modulus. A pass in this idealised extension model does not certify the complete real component.

Review: define the measured gauge length, obtain a gradient with SI units, calculate E rather than stiffness alone, and use an uncertainty interval to qualify the batch decision.

Continue your physics journey
Videos, practice and support for your next step
www.physicsuk.co.uk